A Generalised Variational Quantum Eigensolver

Daochen Wang, Oscar Higgott, Stephen Brierley
River Lane Research
arXiv:1802.00171

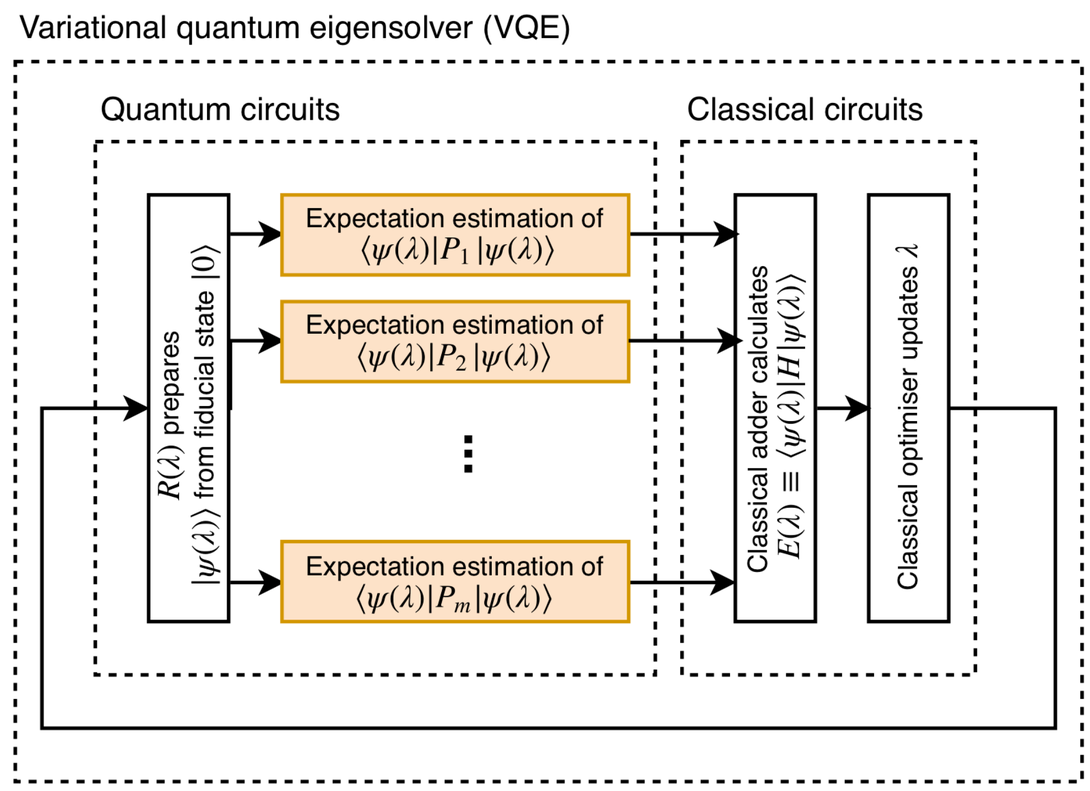

Our generalisation

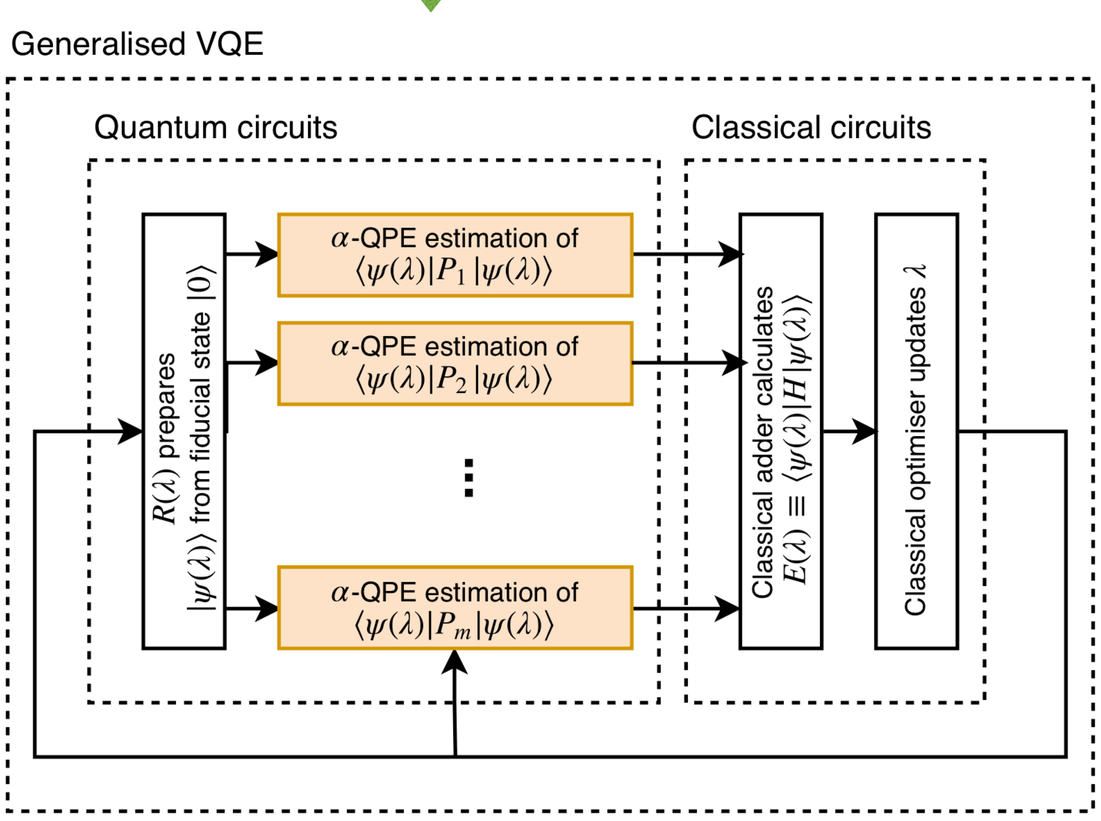

Resource comparisons

Algorithm	Maximum coherent depth	Non-coherent repetitions	Total resources
VQE	$O(C_R)$	$O(\frac{1}{\epsilon^2})$	$O(C_R \frac{1}{\epsilon^2})$
0-VQE	$O(C_R + \log n)$	$O(\frac{1}{\epsilon^2})$	$O((C_R + \log n) \frac{1}{\epsilon^2})$
1-VQE	$O((C_R + \log n) \frac{1}{\epsilon})$	$O(\log \frac{1}{\epsilon})$	$O((C_R + \log n) \frac{1}{\epsilon})$
α-VQE	$O((C_R + \log n) \frac{1}{\epsilon^\alpha})$	$O(f(\epsilon, \alpha))$	$O((C_R + \log n) \frac{1}{\epsilon^\alpha} f(\epsilon, \alpha))$

TABLE I. Resource comparison of one expectation estimation subroutine within VQE, 0-VQE, 1-VQE, α-VQE. ϵ is the precision required for the expected energy, C_R is the state preparation depth cost, n is the number of qubits, and $\alpha \in [0, 1]$ is the free parameter that determines the circuit depth of α-QPE. Note that 0-VQE would never be advantageous over VQE but is included for completeness.

Boxed in red: up to square root speed-up

I. Introduction

The variational quantum eigensolver (VQE) is a hybrid quantum-classical algorithm typically used to approximate the ground energy of a Hamiltonian $H = \sum a_i P_i$ where P_i are tensored Pauli operators. It is often compared with the quantum phase estimation algorithm (QPE). Idea: combine them!

Our work **replaces** the expectation estimation subroutine of VQE by a version of Bayesian QPE [1], which we name **α-QPE**, in order to reduce the subroutine's run-time by **up to a square root**. This is possible by exploiting quantum coherence time.

II. Define α-QPE

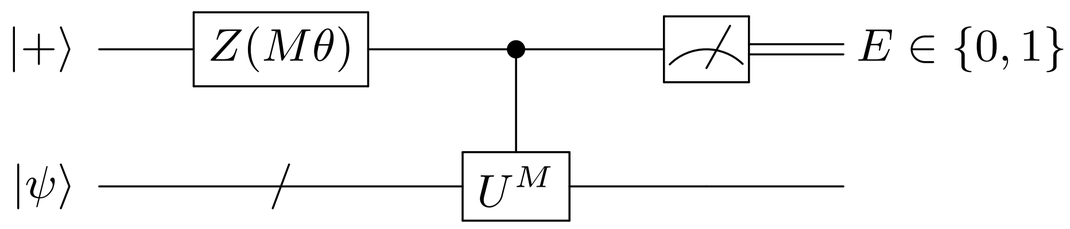

This is the α-QPE circuit which is iterated to find an eigenphase ψ of U. Before each iteration, the real tuple (M, θ) is chosen as $(1/\sigma^\alpha, \mu - \sigma)$ where μ, σ is the current mean and standard deviation on the Bayesian posterior of ψ.

Notation: $Z(M\theta) = \mathrm{diag}(1, e^{-iM\theta})$, $|+\rangle$ is the $+1$ X eigenstate, measurement in the X basis.

III. Replace expectation estimation by α-QPE

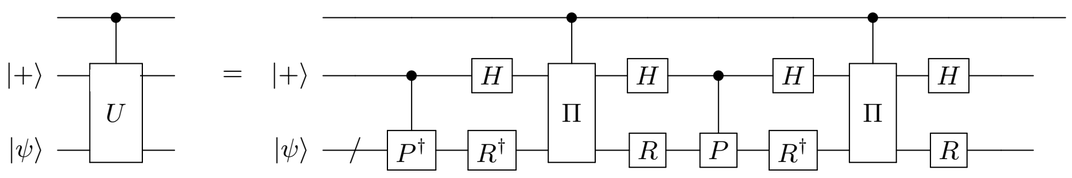

With U defined by the right circuit, Knill et al. [2] showed that $|\psi\rangle$ is always in a 50:50 superposition of two eigenstates of U with eigenphases $\pm\phi$ respectively where $\phi = 2\arccos(|1 + \langle\psi|P|\psi\rangle|/2)$. Running α-QPE with this U estimates the expectation value $\langle\psi|P|\psi\rangle$. This differs from standard expectation estimation which uses statistical sampling.

Notation: $\Pi = I - 2|0\rangle\langle 0|$, $R : |0...0\rangle \mapsto |\psi\rangle$.

References
[1] N. Wiebe, C. Granade, *Physical Review Letters* **2016**, *117*, 10503.
[2] E. Knill, G. Ortiz, R. D. Somma, *Physical Review A* **2007**, *75*, 12328.